Downloaded from http://iranpaper.ir
http://www.itrans24.com/landing1.html
سفارش ترجمه این مقاله
آنلاین: www.trans24.ir
تماس: ۶۶۵۷۲۲۳۸-۴۰ (۰۲۱)
trans24

Electrical Power and Energy Systems 93 (2017) 468–478

Contents lists available at ScienceDirect

Electrical Power and Energy Systems

journal homepage: www.elsevier.com/locate/ijepes

Non-communication protection method for meshed and radial distribution networks with synchronous-based DG

Sadegh Jamali *, Hossein Borhani-Bahabadi

Centre of Excellence for Power System Automation and Operation, School of Electrical Engineering, Iran University of Science and Technology, P.O. Box: 16846-13114, Tehran, Iran

ARTICLE INFO

Article history:
Received 19 January 2017
Received in revised form 1 May 2017
Accepted 16 June 2017

Keywords:
Distribution networks
Non-communication protection
Non-standard characteristic
Meshed and radial DN protection
Synchronous-based DG
Protection coordination

ABSTRACT

This paper presents an efficient protection method which can be used for both meshed and radial distribution networks (DNs) with synchronous-based distributed generation (SBDG) units. The method does not require any communication system in the both grid-connected and islanded modes of operation. The microprocessor-based relays used in the DNs are programmed with a new time-current-voltage characteristic utilising only local fault voltage and current magnitudes. The proposed method is verified by simulation study on the DN of IEEE 30-bus test system as a meshed network in grid-connected mode. The method is also tested on an Iranian practical radial DN in the both grid-connected and islanded modes of operation. The test cases include different fault conditions, with SBDG at various locations and different DG penetration levels, and also without any SBDG in the networks. It is shown in a comparative study that the new time-current-voltage characteristic achieves a notable reduction in total relay operating times without any communication links. In addition, the method uses the same protection settings for the both grid-connected and islanded modes of operation.

© 2017 Elsevier Ltd. All rights reserved.

1. Introduction

Protection coordination is one of the main challenges for the optimal operation of distribution networks (DNs) equipped with distributed generation (DG) units. Increasing the DG penetration level in DNs causes protection challenges due to change of the fault levels and direction of the fault currents, which may lead to miscoordination of protective devices. On the other hand, the ability of the DN operation in the islanded mode is a new concept to be considered in the protection system design facing different fault levels in grid-connected and islanded modes of operation.

Since redesign or replacement of the protection system in a DN is expensive and may be technically difficult, two effective methods for determination of optimum size and location of DG and settings of overcurrent relays without changing the original protection methods are proposed in [1,2]. By increasing the DG penetration level, it is necessary to modify relays setting depending on the DG size and location. Usually, in radial DNs adaptive protection methods change the relays setting by means of communication system. However, establishment of a communication system for protection applications may be a costly option in many DNs.

The major protection methods in DNs with DG units can be classified into six categories as follows:

1.1. Limiting the fault current contribution of DG

In order to limit the fault current contribution of synchronous-based DG (SBDG) a method based on field discharge circuit for synchronous generator is proposed in [3]. Refs. [4–11] use fault current limiter (FCL) or superconductive FCL (SFCL) to reduce DG or utility contribution in fault currents.

1.2. Overcurrent protection

Many of the overcurrent protection methods [12–16] use communication links to transfer data between relays and control center. During communication system failures, backup protection system such as a definite-time grading method [17], can result in a long time to isolate the fault. A protection method based on dual setting directional overcurrent relays for meshed DN is proposed in [18]. However, in order to solve the selectivity problem of this method, utilisation of a communication link between the relays is required [19].

* Corresponding author.
E-mail addresses: sjamali@iust.ac.ir (S. Jamali), h_borhani@elec.iust.ac.ir (H. Borhani-Bahabadi).

http://dx.doi.org/10.1016/j.ijepes.2017.06.019
0142-0615/© 2017 Elsevier Ltd. All rights reserved.

Downloaded from http://iranpaper.ir
http://www.itrans24.com/landing1.html
سفارش ترجمه این مقاله
آنلاین: www.trans24.ir
تماس: ۶۶۵۷۲۲۳۸-۴۰ (۰۲۱)
trans24

1.3. Adaptive voltage protection

Refs. [20,21] propose adaptive protection methods requiring a large number of voltage relays in addition to communication links between all the relays and the control center.

1.4. Distance protection

Distance protection (DP) is a common protection for transmission lines. Ref. [22] propose a DP method to overcome the overcurrent relay maloperation by changes in the upstream network impedance.

1.5. Differential protection

Refs. [23–25] propose implementation of differential protection for DNs with DG. Differential protection method is difficult and costly to be applied in DNs due to a large number of lines, each one equipped with a differential relay, and the communication links between the relays.

1.6. Non-standard relay characteristic

Nowadays the use of microprocessor-based relays, which are programmable and have the ability to change their operating characteristics, is the normal practice. Based on the programmable relays, several non-standard characteristics to reduce overall operating time are proposed for DNs with DG such as: logarithm based overcurrent characteristic [26]; inverse impedance-time characteristic [27]; a combination of standard overcurrent characteristic and a non-standard term based on voltage [28]; and standard characteristic with proposed constants [29,30]. However, all these methods require communication system when applied in radial DNs with DG.

The communication system plays an important role in the adaptive protection methods. Hence, cost, speed, redundancy, and reliability of the communication systems are several important factors that must be considered before implementation an adaptive protection method [31,32].

This paper proposes a protection method using a new time-current-voltage characteristic (TCVC) for programmable relays. The proposed TCVC uses faulted phase voltage and current magnitudes for determining the operating time of the relay. The TCVC does not require any communication system and can protect DNs with high levels of penetration of SBDG in grid-connected and/or islanded modes of operation. In order to verify the performance and effectiveness of the method, the DN of IEEE 30-bus test system and a practical 20 kV Iranian radial DNs are modeled with DG units at various locations and under different fault conditions.

The rest of this paper is organised as follows: Section 2 describes standard and recently proposed non-standard relay characteristics. Section 3 describes the proposed TCVC. Solving the protection coordination problem and determination of the relay settings is described in Section 4. Details of the two test systems are presented in Section 5. Section 6 presents and discusses the results of the simulation study for different fault scenarios. Finally, highlights of the proposed protection method are given in Conclusion.

2. Standard and recently proposed non-standard characteristics

The standard overcurrent relays (OCR) widely used in DNs have a standard inverse time-current characteristic as follows:

$$t = \left[\frac{A}{\left(\frac{I_{sc}}{I_{set}}\right)^{p} - 1} + B\right] \times TDS \tag{1}$$

where t is the relay operating time, I_{sc} is the relay fault current, I_{set} is the relay current setting, TDS is the relay time dial setting and A, B, p are constant parameters.

Although the standard characteristic has a proven track record in DNs over the past century it may be impossible to obtain a proper protection coordination between the relays in DNs, especially radial DNs, with DG units depending on DG size and location. In such cases, the use of communication-assisted overcurrent protection is inevitable.

A non-standard characteristic for overcurrent relay is proposed in [26] as follow:

$$t = a \log\left(\frac{I_{sc}}{I_{set}}\right) + b \tag{2}$$

where t is the relay operating time, I_{sc} is the relay fault current, I_{set} is the relay current setting and a, b are the constant parameters.

Eq. (2) is similar to fuse characteristic with the difference that a and b are obtained by solving two nonlinear inequality equations.

An inverse impedance-time characteristic is proposed in [27]:

$$t = \left[\frac{A}{\left(\frac{Y_{sc}}{Y_{set}}\right)^{p} - 1} + B\right] \times TDS \tag{3}$$

where t is the relay operating time, Y_{sc} is the measured admittance between the relay and the faulted node, Y_{set} is the total admittance of the protected line segment, TDS is the time dial setting and A, B, p are constant parameters. This method can only detect faults on the protected line segment and cannot provide any backup protection.

In [28] a time-current-voltage characteristic is proposed for directional OCRs expressed by:

$$t = \left(\frac{1}{e^{1-V_{sc}}}\right)^{k} TDS \frac{0.14}{\left(\frac{I_{sc}}{I_{set}}\right)^{0.02} - 1} \tag{4}$$

where t is the relay operating time, I_{sc} is the relay fault current, I_{set} is the relay current setting, TDS is the time dial setting and V_{sc} is the fault voltage magnitude in per unit ($p.u.$). This characteristic shows a considerable reduction in the protection operation time and improves protection coordination over other standard and non-standard characteristics.

3. Proposed time-current-voltage characteristic

In this paper, a new time-current-voltage characteristic of Eq. (5) is proposed for microprocessor-based relays:

$$t = TDS \times \frac{(Vpu)^{k}}{e^{Vpu}} \times \left[\frac{A}{\left(Ln\left(V_n \times \frac{Isc}{Vsc}\right)\right)^{p} - \left(Ln\left(V_n \times \frac{I_{set}}{Vset}\right)\right)^{p}} + B\right] + D \tag{5}$$

where t is the relay operating time, TDS is the time dial setting, A, B, p, k and D are constant parameters. V_{sc} is the phase fault voltage magnitude measured at the relay location in Volts, V_{pu} is the phase fault voltage magnitude measured at the relay location in $p.u.$, and V_n is the nominal phase voltage of the system. I_{sc} is the fault current passing through the relay in Amperes. V_{set} and I_{set} are the voltage and current settings, respectively. $Ln(*)$ is natural logarithm. Using V_n/V_{sc} leads to simplified calculations because quantities expressed as V_n/V_{sc} do not change when they are referred to different nominal system voltages. Also, natural logarithm can smooth large changes in I_{sc}. This can be a pronounced advantage in protection schemes where wide ranges of fault voltage and current values may be encountered. The main idea of a logarithm based TCVC is to absorb large differences in fault voltage and current values into a limited area. The effectiveness of the proposed TCVC on meshed and radial

Downloaded from http://iranpaper.ir
http://www.itrans24.com/landing1.html
سفارش ترجمه این مقاله
آنلاین: www.trans24.ir
تماس: ۶۶۵۷۲۲۳۸-۴۰ (۰۲۱)
trans24

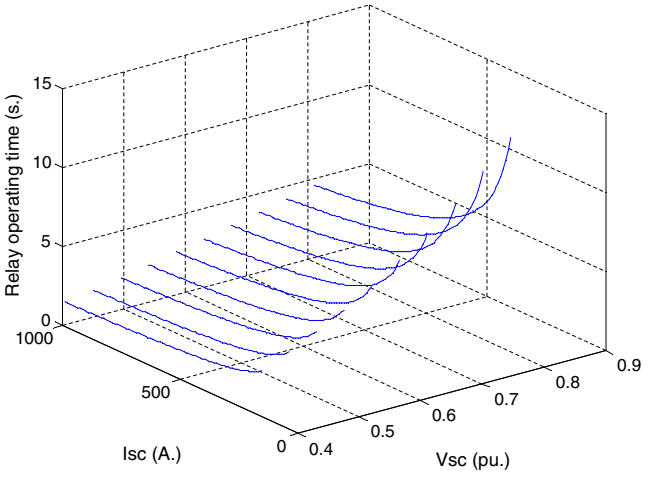

Fig. 1. The proposed TCVC curve with $TDS = 1$, $V_{set} = 1$ *p.u.*, $k = 1$ and $I_{set} = 100$ A.

DNs with different nominal system voltages and short circuit levels is shown in the simulation results of Section 6.

In this paper, the selected values for constants A, B and p, are 0.14, 0, and 0.02, respectively, according to the normal inverse characteristic of the IEC standard.

The relay operating time with proposed TCVC depends on the V_{sc} measured at the relay location. For a bolted fault occurring at the relay location, V_{sc} becomes zero. In such case, if a non-zero relay operation time is desired, the D constant can be set to a non-zero value.

Fig. 1 illustrates the proposed TCVC curve for a relay with both TDS and V_{set} are set at 1 *p.u.*, I_{set} set at 100 A, and k is set at 2. It can be seen that the proposed TCVC is a combination of inverse time current and inverse time voltage characteristics.

The proposed TCVC is capable of providing protection against all fault types including three-phase (LLL), two-phase (LL), two-phase to earth (LLG) and single-phase to earth (LG) faults. The TCVC utilises the relay fault voltage magnitude in addition to the relay fault current magnitude to determine the relay operating time and it can be used for grid-connected and islanded modes of operation of DNs. During any type of fault, the operating time for each phase is calculated using Eq. (5) and the minimum time will determine the overall operating time of the relay.

Incorporating DG units into DN affects the magnitude and direction of the fault current. Therefore, use of directional overcurrent relay in DNs with DG is common [28]. In the proposed TCVC protection method, the relays must be equipped with directional element. In a three phases system, in order to detect fault current direction the overcurrent relay must be equipped with three voltage transformers in addition to the three current transformers.

4. Protection coordination optimisation

4.1. Problem formulation

The protection coordination can be solved as an optimisation problem in order to minimise the total primary and backup relay operating times due to different fault types and various fault locations whilst satisfying the coordination time interval (CTI) and relay setting constraints. Therefore, the objective function of optimisation is to minimise the total operating times of primary and backup relays:

$$T = \sum_{i=1}^{N}\sum_{j=1}^{M}\sum_{l=1}^{L}\left(t_{p-ijl} + \sum_{p=1}^{P} t_{bp-ijl}\right) \tag{6}$$

where T is the total relays operating time, N is the total number of the relays, M is the total number of fault types, L is the total number of fault locations, P is the number of backup relays for each primary relay. The primary and backup operating times, $t_{p\text{-}ijl}$ and $t_{bp\text{-}ijl}$, are for the ith relay, fault type j, and fault location l, respectively.

The protection coordination constraint can be represented as follows:

$$t_{bp-ijl} - t_{p-ijl} \geqslant \mathrm{CTI}\ \forall i,j,k \tag{7}$$

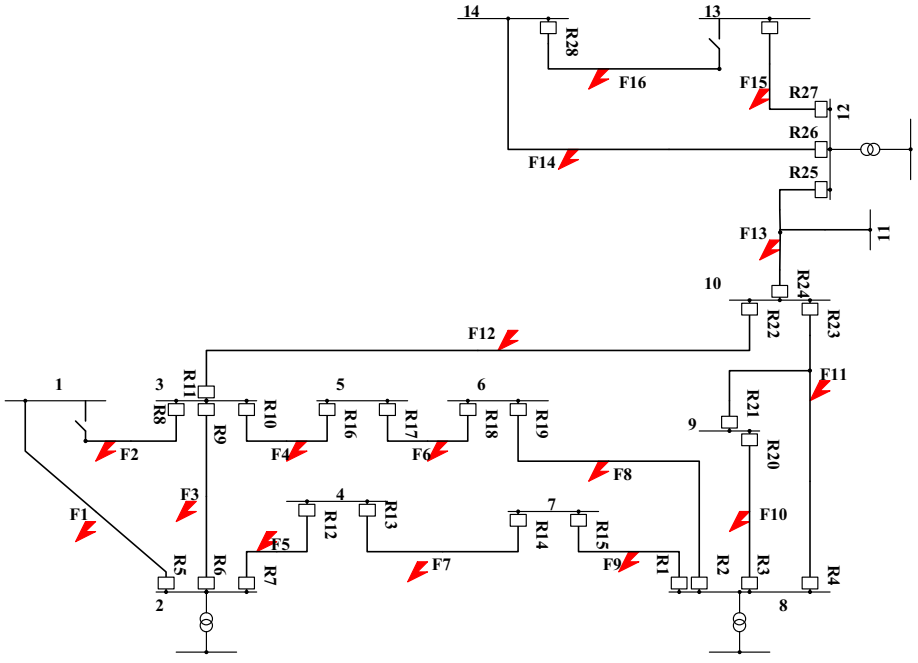

Fig. 2. Distribution network of the IEEE 30-bus test system.

Downloaded from http://iranpaper.ir
http://www.itrans24.com/landing1.html
سفارش ترجمه این مقاله
آنلاین: www.trans24.ir
تماس: ۶۶۵۷۲۲۳۸-۴۰ (۰۲۱)
trans24

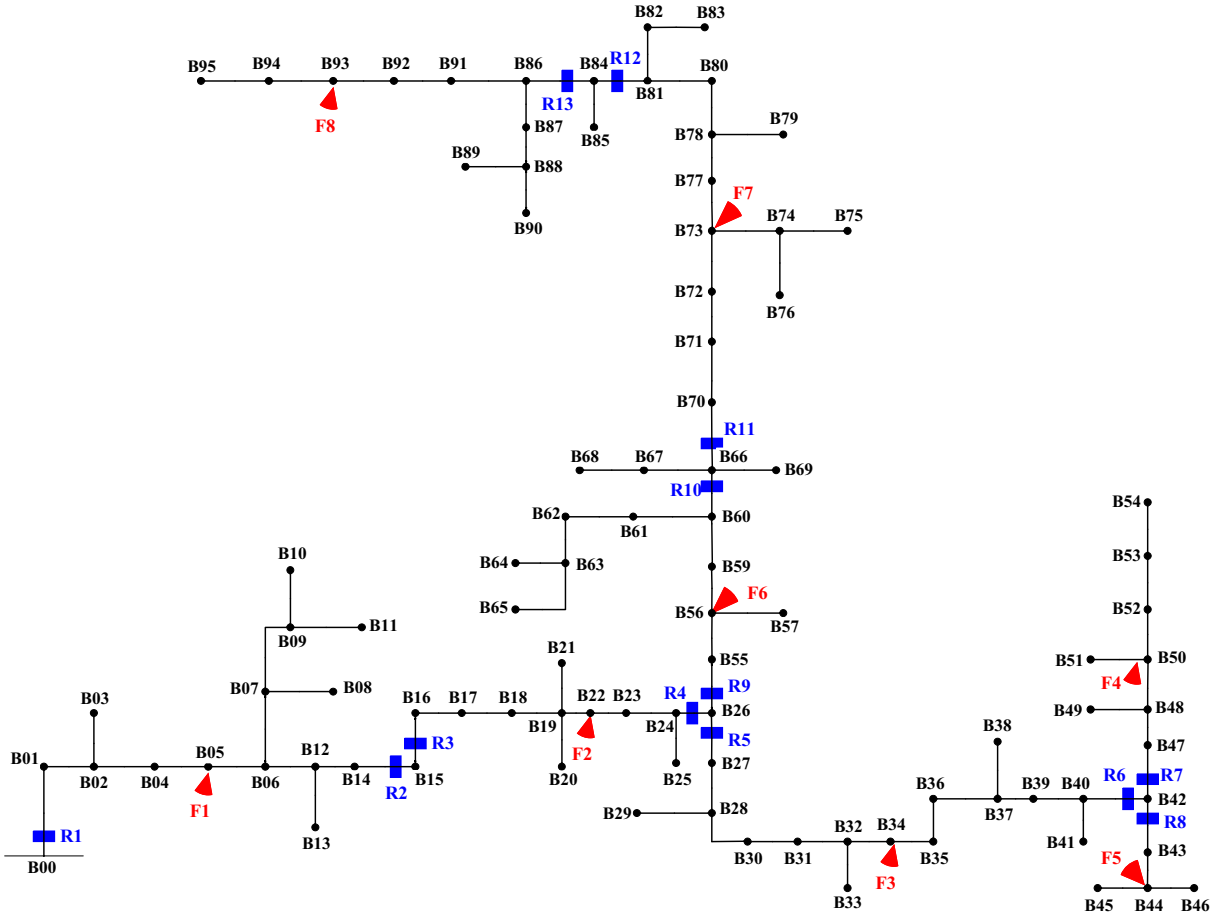

Fig. 3. A practical Iranian radial distribution network.

Table 1
DG connection scenarios for IEEE 30-bus system.

Scenario	Number of DG units	Connection buses
1	0	–
2	1	3
3	2	3, 4
4	3	3, 4, 5
5	4	3, 4, 5, 7
6	5	3, 4, 5, 7, 10
7	6	3, 4, 5, 7, 10, 11
8	7	3, 4, 5, 7, 10, 11, 13
9	8	3, 4, 5, 7, 10, 11, 13, 14
10	9	1, 3, 4, 5, 7, 10, 11, 13, 14

where *CTI* is the coordination time interval that indicates the minimum time interval between the backup and the primary relay. In this paper, it set at 0.2 s.

In addition, the following relay setting constraints must be satisfied for the optimisation problem:

$$I_{max\text{-}loadi} < I_{set\text{-}i} < I_{sc\text{-}mini} \tag{8}$$

$$TDS_{min} \leqslant TDS_i \leqslant TDS_{max} \tag{9}$$

where $I_{max\text{-}loadi}$ and $I_{sc\text{-}mini}$ are the ith relay maximum load current and minimum short circuit current, respectively. TDS_{min} and TDS_{max} are the TDS limits of the ith relay.

4.2. Determination of the relay setting

In the presence of DG in DNs, the relays current setting, I_{set}, can change depending on the location and size of the DG units. It is therefore intended to find the relay current setting considering all scenarios of the DN operation. According to Eq. (8) for the relays current setting the maximum load current and minimum fault current for each relay are required. For the calculation of the maximum load current of each relay, load flow analysis is carried out for all the scenarios of DG location and capacity. In order to obtain the minimum fault current of each relay, for all the load flow scenarios, a set of different bolted fault types are applied at three different locations of near-end, midpoint, and far-end of the feeder. however, the coordinated relays using this technique can respond to any fault as long the fault level is above the relay current setting. For example, for 10 load flow scenarios, 16 fault locations, and 4 fault types of LG, LL, LLG and LLL, the total fault scenarios are $10 \times 16 \times 4 = 540$. Once the limits of I_{set} are known, an optimisation model is solved for the standard characteristic to determine the optimum value of I_{set} for each relay.

The aforementioned optimisation problem is used to determine TDS and k for the TCVC by Eq. (5). Because of the nonlinear relationship between the relay operating time and k, the optimisation model is formulated as a nonlinear programming (NLP) problem to obtain TDS and k. There is no upper limits for the TDS and k values in the proposed TCVC. The lower limits of the TDS and k values are set at 0.05 and 0, respectively.

In the proposed TCVC, the V_{set} is set at 1 *p.u.* for all the relays in the DN. This setting is proposed for the ease of relay voltage setting.

Downloaded from http://iranpaper.ir
http://www.itrans24.com/landing1.html
سفارش ترجمه این مقاله
آنلاین: www.trans24.ir
تماس: ۶۶۵۷۲۲۳۸-۴۰ (۰۲۱)
trans24

Table 2
Optimal values of the standard, [28] and the proposed method.

Relay	Characteristic parameter					
	Standard		[28]		Proposed	
	Iset (A)	TDS	TDS	k	TDS	k
R1	800	0.153	0.480	4.784	0.114	3.495
R2	800	0.145	0.150	2.262	0.101	5.232
R3	800	0.094	0.344	4.835	0.061	2.631
R4	477	0.053	0.100	7.857	0.050	6.420
R5	100	0.050	0.050	121.758	0.050	120.379
R6	800	0.199	0.197	4.042	0.076	5.231
R7	800	0.170	0.327	5.665	0.085	4.845
R8	100	0.050	0.05	101.785	0.050	87.018
R9	300	0.103	0.192	4.977	0.059	3.139
R10	800	0.159	0.301	3.518	0.104	3.340
R11	453	0.161	0.179	2.296	0.093	4.074
R12	495	0.071	0.058	2.146	0.050	3.088
R13	800	0.120	0.346	2.843	0.066	1.600
R14	800	0.093	0.495	5.171	0.112	3.472
R15	142	0.182	0.222	1.403	0.083	1.111
R16	174	0.162	0.139	1.122	0.050	0.796
R17	800	0.116	0.281	2.457	0.055	1.127
R18	800	0.099	0.117	1.199	0.050	0.989
R19	90	0.217	0.299	2.276	0.109	1.605
R20	38	0.300	0.321	1.298	0.149	1.282
R21	472	0.059	0.131	5.276	0.052	3.936
R22	382	0.103	0.091	1.821	0.050	2.067
R23	32	0.405	0.405	1.009	0.240	1.576
R24	404	0.050	0.073	5.254	0.050	7.261
R25	90	0.325	0.284	1.274	0.229	3.958
R26	533	0.050	0.064	3.559	0.050	5.738
R27	100	0.050	0.050	78.071	0.050	55.578
R28	100	0.050	0.050	43.113	0.050	34.705
T (s)	1873.88		1089.59		968.31	

Table 3
Optimal primary and backup relay operating times of Scenario 10 for LLL faults.

Fault location	Operating times of relays in sec. (p = primary, b = backup)											
	Standard characteristic				[28] characteristic				Proposed characteristic			
	p	b1	b2	b3	p	b1	b2	b3	p	b1	b2	b3
F2	R8	R6	R16	R22	R8	R6	R16	R22	R8	R6	R16	R22
	0.081	0.811	0.693	0.839	0.000	0.489	0.407	0.498	0.000	0.490	0.445	0.483
F4	R10	R6	R22	–	R10	R6	R22	–	R10	R6	R22	–
	0.545	0.759	0.797	–	0.130	0.359	0.399	–	0.047	0.400	0.380	–
	R16	R18	–	–	R16	R18	–	–	R16	R18	–	–
	0.427	0.646	–	–	0.146	0.356	–	–	0.101	0.305	–	–
F6	R17	R10	–	–	R17	R10	–	–	R17	R10	–	–
	0.544	0.748	–	–	0.165	0.391	–	–	0.095	0.325	–	–
	R18	R2	–	–	R18	R2	–	–	R18	R2	–	–
	0.466	0.678	–	–	0.196	0.401	–	–	0.095	0.405	–	–
F8	R2	R15	R20	R23	R2	R15	R20	R23	R2	R15	R20	R23
	0.572	0.772	3.269	1.583	0.299	0.652	2.366	1.199	0.278	0.572	1.407	1.049
	R19	R17	–	–	R19	R17	–	–	R19	R17	–	–
	0.423	0.649	–	–	0.069	0.286	–	–	0.003	0.222	–	–
F10	R3	R15	R19	R23	R3	R15	R19	R23	R3	R15	R19	R23
	0.248	0.448	0.591	0.657	0.024	0.224	0.227	0.347	0.006	0.212	0.219	0.260
	R20	R23	–	–	R20	R23	–	–	R20	R23	–	–
	0.452	0.657	–	–	0.146	0.347	–	–	0.035	0.260	–	–
F12	R11	R6	R16	–	R11	R6	R16	–	R11	R6	R16	–
	0.421	0.748	0.661	–	0.118	0.351	0.341	–	0.012	0.393	0.370	–
	R22	R4	R21	R25	R22	R4	R21	R25	R22	R4	R21	R25
	0.395	0.924	0.629	1.019	0.150	0.369	0.369	0.697	0.160	0.518	0.367	0.738
F14	R26	R24	–	–	R26	R24	–	–	R26	R24	–	–
	0.208	0.414	–	–	0.053	0.292	–	–	0.028	0.255	–	–
F16	R28	R26	–	–	R28	R26	–	––	R28	R26	–	–
	0.128	0.345	–	–	0.000	0.200	–	–	0.000	0.201	–	–

Downloaded from http://iranpaper.ir
http://www.itrans24.com/landing1.html
سفارش ترجمه این مقاله
آنلاین: www.trans24.ir
تماس: ۶۶۵۷۲۲۳۸-۴۰ (۰۲۱)
trans24

5. Test systems

This section describes the two test systems, one meshed and one radial DN, used to validate the proposed TCVC method.

For the meshed network, the 33 kV level of the IEEE 30-bus test system is used [28]. The single-line diagram of this system is shown in Fig. 2. The system is equipped with 28 directional overcurrent relays. The SBDG units modeled in this study are each rated at 2 MVA and sub-transient impedance of 9.67%. Each SBDG is integrated into the network using a step-up 0.48/33 kV transformer with the rated capacity of 2.5 MVA, and 5% impedance.

The second test system is a practical 20 kV Iranian DN with real data for the DG modeling. The single line diagram of this network is shown in Fig. 3. It is energised by two 63/20 kV, 30 MVA, Ynd1 transformers with 13.7% transient reactance. The fault current level at 63 kV busbar is 3.65 kA. There are two 20/0.4 kV, ZNyn11, with 6.5% transient reactance auxiliary transformers connected to the 20 kV busbar for the substation auxiliary power supply and also to provide an earth path for the 20 kV delta-connected system. The radial network is equipped with 13 directional relays (R1 to R13). Each SBDG is a 1.3 MVA unit with 13.6% sub-transient impedance connected to the DN by a 0.4/20 kV step-up transformer with 3% transient reactance. The detailed information of the network is given in [33].

For the meshed network, each line section is equipped with two relays, one at each line end. The fault scenarios for the meshed DN include all the fault types at the midpoint of each line. For the radial network, the set of lines and nodes that are between two relays, for example R1 and R2, is named as an area. For the middle areas three fault positions are considered, one at around the midpoint of the area as shown in Fig. 3, two faults where each one is close to the relay location. For the outer areas, which are protected by one relay, the three fault positions are considered, one fault position as shown in Fig. 3 and the other two faults are at the relay location and at the end of the area.

The points F1-F16 in Fig. 2 and F1-F8 in Fig. 3 represent the fault location on the midpoint of each line or area. For a complete evaluation of the proposed method, a set of bolted phase to phase faults (LL and LLL) and single or double phase to earth faults (LLG and LG) are applied at the different positions.

The candidate buses for the DG units connection to the meshed DN (Fig. 2) are 1, 3, 4, 5, 7, 10, 11, 13, and 14. In addition, B15, B26, B42, B66 and B84 are the candidate buses for the DG units connection to the radial DN (Fig. 3).

6. Simulation study and discussion

6.1. Protection coordination in meshed DN

The first part of this study consists of ten scenarios of Table 1 applied to the DN of IEEE 30-bus system by varying locations of DG units [28]. For a comparative study, the results are also given for the standard characteristic and the characteristic given by Eq. (4) from [28].

The I_{set} for the directional OCRs are obtained with the procedure described in Section 4.2 by solving the optimisation problem using GAMS for the standard characteristic. Similar I_{set} is used for all the relay characteristics in this study. In order to obtain TDS for all the three characteristics and k for the other two non-standard characteristics, the optimisation model is solved using GAMS. The optimal parameters for the standard, [28] and the proposed methods are presented in Table 2. The optimal relay settings achieved in each method ensure proper coordination of the relays under different fault types and fault locations on each line of the DN. The objective function values as total primary and backup relay operating times for the three methods under all the scenarios are presented in the last row of Table 2. In general, the proposed TCVC has a faster operation time of 768.31 s representing a reduction of 59% and 11.1% compared to the standard and [28] methods, respectively.

For brevity, a comparison of primary and backup relays operating times between the proposed TCVC, the standard and [28] methods of Scenario 10 is presented in Table 3 for the LLL fault occurring at the mid-point of the selected lines. The results for other fault types are presented in Tables A1–A3 of Appendix.

The results show the optimal relay settings are achieved by all the methods ensuring proper coordination with the CTIs equal or greater than 200 ms for different fault types. In general, by comparing the results of the standard and the proposed protection scheme, it can be seen that all the relays experience a reduction in their operating time with the TCVC method. In addition, by using the proposed characteristic, the sum of primary and backup relay operating times for different fault types and many locations are less than the method of [28]. Similar results can be noticed for other scenarios.

Table 4
Radial DN scenarios in both grid-connected and islanded modes of operation.

Scenario	DG location Connection bus/buses (number of generators)
1	–[a]
2	B15 (6)
3	B26 (6)
4	B42 (6)
5	B66 (6)
6	B84 (6)
7	B15 (2), B26 (2), B42 (2)
8	B15 (2), B42 (2), B66 (2)
9	B26 (2), B66 (2), B84 (2)
10	B15 (3), B42 (3)
11	B26 (3), B66 (3)
12	B26 (3), B84 (3)
13	B42 (4), B84 (2)
14	B26 (1), B42 (2), B66 (3)
15	B15 (1), B26 (2), B42 (1), B66 (1), B84 (1)

[a] Only for grid-connected mode of operation.

Table 5
Optimal TDS and k values of the proposed TCVC for radial DN relays.

Relay	Iset (A)	TDS	k
R1	195	2.435	0.802
R2	38	0.050	150
R3	157	1.993	0.651
R4	54	4.890	1.125
R5	70	1.550	0.497
R6	167	3.347	0.740
R7	20	0.050	150
R8	8	0.050	150
R9	70	1.305	0.322
R10	151	3.767	0.799
R11	44	0.683	0.235
R12	174	3.686	0.548
R13	22	0.050	150

6.2. Protection coordination in radial DN

The second part of this study consists of fifteen DG scenarios applied in the radial DN by varying the DG location and the number of its generator units in both grid-connected and islanded modes of operation as given in Table 4.

The TDS and k values in the proposed TCVC for all the grid-connected and islanded scenarios are optimised together, thereby obviating the need for adaptive relay settings which require com-

Downloaded from http://iranpaper.ir
http://www.itrans24.com/landing1.html
سفارش ترجمه این مقاله
آنلاین: www.trans24.ir
تماس: (۰۲۱) ۶۶۵۷۲۲۳۸-۴۰
trans24

Table 6
Optimal primary and backup relay operating times of Scenario 15 for LLL faults in radial DN.

Fault location	Operating times of relays in sec. (p = primary, b = backup)					
	Islanded			Grid-connected		
	p	b1	b2	p	b1	b2
F1	R1	–	–	R1	–	–
	–	–	–	0.057	–	–
	R2	R4	–	R2	R4	–
	0.000	0.204	–	0.000	0.205	–
F2	R3	R1	–	R3	R1	–
	0.000	–	–	0.422	0.792	–
	R4	R6	R10	R4	R6	R10
	0.204	0.557	0.416	0.205	0.538	0.412
F3	R5	R10	R3	R5	R10	R3
	0.295	0.593	0.969	0.254	0.785	0.862
	R6	–	–	R6	–	–
	0.349	–	–	0.330	–	–
F4	R7	R5	–	R7	R5	–
	0.020	0.343	–	0.019	0.259	–
F5	R8	R5	–	R8	R5	–
	0.018	0.338	–	0.018	0.259	–
F6	R9	R3	R6	R9	R3	R6
	0.559	1.863	1.018	0.507	0.851	1.232
	R10	R12	–	R10	R12	–
	0.258	0.545	–	0.253	0.537	–
F7	R11	R9	–	R11	R9	–
	0.260	0.654	–	0.245	0.528	–
	R12	–	–	R12	–	–
	0.286	–	–	0.280	–	–
F8	R13	R11	–	R13	R11	–
	0.021	0.300	–	0.020	0.258	–

munication systems. Therefore, the optimum TDS and k values of the relays given in Table 5 are the same for both the grid-connected and islanded modes of operation. The selected values for I_{set} that are obtained using the procedure described in Section 4.2, are given in the second column of Table 5.

The operating time of primary and backup relays under different fault types in Scenario 15 and fault at the midpoint of each area is presented in Tables 6. The results for other fault types are presented in Tables B1 and B2 of Appendix. In all the cases, a proper CTI is achieved.

As can be seen from the results, the proposed TCVC can achieve proper protection coordination in both grid-connected and islanded modes of operation. The same relay settings are given in Table 5 for both grid-connected and islanded modes of operation, thereby reducing the complexity of the protection scheme. The CTI is satisfied for all the fault types and the different scenarios in the both modes of operation.

The presented method in [28] cannot maintain the coordination between relays without a communication system in radial DNs with SBDG units, for example the scenarios of Table 6, whereas the proposed TCVC keeps the relays coordinated with appropriate CTI in both grid-connected and islanded modes of operation. Moreover, the TCVC does not require a communication system, and it is independent of DN operation mode.

7. Conclusion

Nowadays, overcurrent relays are manufactured based on the digital technology, which can be programmed for standard or any desired characteristics. The non-standard time-current-voltage characteristic proposed in this paper can be used in both grid-connected and islanded modes of DN operation with synchronous-based DG units. The same relay settings are used for the both modes of operation, hence no communication links are required for resetting the relays for appropriate modes of operation. Moreover, the TCVC relay uses local measurements for coordinated operation during a fault condition, whereas most previous methods use horizontal links between the DN relays and/or vertical links to a master protection unit for isolating the faulted area.

The TCVC performance is validated by simulation study on the meshed and radial DN configurations. For different DG sizes and locations under different fault types, the results show successful operations of the proposed TCVC for grid-connected and islanded modes of operation for all the cases. The results are also compared with the standard overcurrent characteristic and a recent non-standard characteristic proposed in the literature. It is shown that the proposed TCVC achieves a notable reduction in the total operating times of the DN relays compared with these characteristics.

Appendix A

Optimal primary and backup relay operating times of Scenario 10 for different fault types in meshed DN are presented in Tables A1–A3.

Downloaded from http://iranpaper.ir
http://www.itrans24.com/landing1.html
سفارش ترجمه این مقاله
آنلاین: www.trans24.ir
تماس: ۶۶۵۷۲۲۳۸-۴۰ (۰۲۱)
trans24

Table A1
Optimal primary and backup relay operating times of Scenario 10 for LL faults.

Fault location	Operating times of relays in sec. (p = primary, b = backup)											
	Standard characteristic				[28] characteristic				Proposed characteristic			
	p	b1	b2	b3	p	b1	b2	b3	p	b1	b2	b3
F2	R8	R6	R16	R22	R8	R6	R16	R22	R8	R6	R16	R22
	0.086	0.919	0.753	0.995	0.000	0.814	0.541	0.715	0.000	0.626	0.564	0.662
F4	R10	R6	R22	–	R10	R6	R22	–	R10	R6	R22	–
	0.618	0.862	0.946	–	0.372	0.588	0.586	–	0.343	0.545	0.551	–
	R16	R18	–	–	R16	R18	–	–	R16	R18	–	–
	0.462	0.793	–	–	0.250	0.616	–	–	0.313	0.624	–	–
F6	R17	R10	–	–	R17	R10	–	–	R17	R10	–	–
	0.632	0.869	–	–	0.531	0.754	–	–	0.416	0.632	–	–
	R18	R2	–	–	R18	R2	–	–	R18	R2	–	–
	0.538	0.782	–	–	0.377	0.585	–	–	0.428	0.637	–	–
F8	R2	R15	R20	R23	R2	R15	R20	R23	R2	R15	R20	R23
	0.649	0.886	0.929	1.541	0.452	0.873	0.787	1.294	0.505	0.705	0.705	1.160
	R19	R17	–	–	R19	R17	–	–	R19	R17	–	–
	0.450	0.774	–	–	0.221	0.729	–	–	0.259	0.508	–	–
F10	R3	R15	R19	R23	R3	R15	R19	R23	R3	R15	R19	R23
	0.277	0.491	0.651	0.698	0.181	0.381	0.445	0.496	0.192	0.392	0.435	0.571
	R20	R23	–	–	R20	R23	–	–	R20	R23	–	–
	0.477	0.698	–	–	0.295	0.496	–	–	0.368	0.571	–	–
F12	R11	R6	R16	–	R11	R6	R16	–	R11	R6	R16	–
	0.462	0.849	0.722	–	0.242	0.579	0.464	–	0.203	0.539	0.500	–
	R22	R4	R21	R25	R22	R4	R21	R25	R22	R4	R21	R25
	0.445	1.421	0.936	1.116	0.235	1.144	0.959	0.844	0.273	1.014	0.730	0.937
F14	R26	R24	–	–	R26	R24	–	–	R26	R24	–	–
	0.227	0.491	–	–	0.111	0.429	–	–	0.118	0.320	–	–
F16	R28	R26	–	–	R28	R26	–	–	R28	R26	–	–
	0.136	0.382	–	–	0.000	0.293	–	–	0.000	0.287	–	–

Table A2
Optimal primary and backup relay operating times of Scenario 10 for LLG faults.

Fault location	Operating times of relays in sec. (p = primary, b = backup)											
	Standard characteristic				[28] characteristic				Proposed characteristic			
	p	b1	b2	b3	p	b1	b2	b3	p	b1	b2	b3
F2	R8	R6	R16	R22	R8	R6	R16	R22	R8	R6	R16	R22
	0.080	0.795	0.684	0.810	0.000	0.543	0.413	0.501	0.000	0.510	0.454	0.491
F4	R10	R6	R22	–	R10	R6	R22	–	R10	R6	R22	–
	0.537	0.748	0.767	–	0.134	0.388	0.399	–	0.054	0.421	0.390	–
	R16	R18	–	–	R16	R18	–	–	R16	R18	–	–
	0.422	0.629	–	–	0.146	0.353	–	–	0.107	0.314	–	–
F6	R17	R10	–	–	R17	R10	–	–	R17	R10	–	–
	0.537	0.738	–	–	0.165	0.404	–	–	0.098	0.344	–	–
	R18	R2	–	–	R18	R2	–	–	R18	R2	–	–
	0.455	0.656	–	–	0.193	0.420	–	–	0.098	0.452	–	–
F8	R2	R15	R20	R23	R2	R15	R20	R23	R2	R15	R20	R23
	0.554	0.813	1.174	1.712	0.318	0.722	0.891	1.330	0.329	0.616	0.772	1.144
	R19	R17	–	–	R19	R17	–	–	R19	R17	–	–
	0.418	0.640	–	–	0.068	0.288	–	–	0.003	0.227	–	–
F10	R3	R15	R19	R23	R3	R15	R19	R23	R3	R15	R19	R23
	0.231	0.452	0.602	0.658	0.029	0.239	0.246	0.351	0.013	0.237	0.244	0.270
	R20	R23	–	–	R20	R23	–	–	R20	R23	–	–
	0.442	0.658	–	–	0.144	0.351	–	–	0.039	0.270	–	–
F12	R11	R6	R16	–	R11	R6	R16	–	R11	R6	R16	–
	0.416	0.738	0.652	–	0.120	0.380	0.345	–	0.015	0.415	0.379	–
	R22	R4	R21	R25	R22	R4	R21	R25	R22	R4	R21	R25
	0.388	0.816	0.588	1.003	0.152	0.415	0.399	0.710	0.168	0.549	0.396	0.779
F14	R26	R24	–	–	R26	R24	–	–	R26	R24	–	–
	0.197	0.447	–	–	0.060	0.332	–	–	0.044	0.277	–	–
F16	R28	R26	–	–	R28	R26	–	–	R28	R26	–	–
	0.127	0.329	–	–	0.000	0.213	–	–	0.000	0.219	–	–

Downloaded from http://iranpaper.ir
http://www.itrans24.com/landing1.html
سفارش ترجمه این مقاله
آنلاین: www.trans24.ir
تماس: ۶۶۵۷۲۲۳۸-۴۰ (۰۲۱)
trans24

Table A3
Optimal primary and backup relay operating times of Scenario 10 for LG faults.

Fault location	Operating times of relays in sec. (p = primary, b = backup)											
	Standard characteristic				[28] characteristic				Proposed characteristic			
	p	b1	b2	b3	p	b1	b2	b3	p	b1	b2	b3
F2	R8	R6	R16	R22	R8	R6	R16	R22	R8	R6	R16	R22
	0.081	0.828	0.712	0.853	0.000	0.474	0.421	0.502	0.000	0.485	0.456	0.484
F4	R10	R6	R22	–	R10	R6	R22	–	R10	R6	R22	–
	0.548	0.776	0.793	–	0.129	0.338	0.394	–	0.045	0.382	0.376	–
	R16	R18	–	–	R16	R18	–	–	R16	R18	–	–
	0.429	0.657	–	–	0.148	0.366	–	–	0.108	0.315	–	–
F6	R17	R10	–	–	R17	R10	–	–	R17	R10	–	–
	0.553	0.760	–	–	0.170	0.389	–	–	0.099	0.319	–	–
	R18	R2	–	–	R18	R2	–	–	R18	R2	–	–
	0.462	0.668	–	–	0.195	0.409	–	–	0.096	0.425	–	–
F8	R2	R15	R20	R23	R2	R15	R20	R23	R2	R15	R20	R23
	0.561	0.893	1.559	3.396	0.309	0.771	1.157	2.586	0.307	0.645	0.915	1.740
	R19	R17	–	–	R19	R17	–	–	R19	R17	–	–
	0.421	0.668	–	–	0.069	0.299	–	–	0.003	0.230	–	–
F10	R3	R15	R19	R23	R3	R15	R19	R23	R3	R15	R19	R23
	0.238	0.469	0.629	0.672	0.027	0.240	0.242	0.349	0.010	0.227	0.229	0.245
	R20	R23	–	–	R20	R23	–	–	R20	R23	–	–
	0.449	0.672	–	–	0.145	0.349	–	–	0.036	0.245	–	–
F12	R11	R6	R16	–	R11	R6	R16	–	R11	R6	R16	–
	0.421	0.766	0.674	–	0.118	0.334	0.351	–	0.012	0.379	0.379	–
	R22	R4	R21	R25	R22	R4	R21	R25	R22	R4	R21	R25
	0.395	0.894	0.621	1.016	0.150	0.364	0.368	0.696	0.160	0.514	0.367	0.737
F14	R26	R24	–	–	R26	R24	–	–	R26	R24	–	–
	0.196	0.525	–	–	0.061	0.381	–	–	0.046	0.310	–	–
F16	R28	R26	–	–	R28	R26	–	–	R28	R26	–	–
	0.126	0.327	–	–	0.000	0.219	–	–	0.000	0.225	–	–

Appendix B

Optimal primary and backup relay operating times of Scenario 15 for different fault types in radial DN are presented in Tables B1 and B2.

Table B1
Optimal primary and backup relay operating times of Scenario 15 for LLG faults in radial DN.

Fault location	Operating times of relays in sec. (p = primary, b = backup)					
	Islanded			Grid-connected		
	p	b1	b2	p	b1	b2
F1	R1	–	–	R1	–	–
	–	–	–	0.103	–	–
	R2	R4	–	R2	R4	–
	0.000	0.218	–	0.000	0.228	–
F2	R3	R1	–	R3	R1	–
	0.000	–	–	0.456	0.872	–
	R4	R6	R10	R4	R6	R10
	0.218	0.770	0.521	0.228	0.879	0.560
F3	R5	R10	R3	R5	R10	R3
	0.316	0.662	1.353	0.258	0.772	0.899
	R6	–	–	R6	–	–
	0.560	–	–	0.611	–	–
F4	R7	R5	–	R7	R5	–
	0.021	0.346	–	0.020	0.258	–
F5	R8	R5	–	R8	R5	–
	0.019	0.343	–	0.019	0.259	–
F6	R9	R3	R6	R9	R3	R6
	0.611	1.412	1.108	0.523	0.891	1.286
	R10	R12	–	R10	R12	–
	0.355	0.791	–	0.377	0.858	–
F7	R11	R9	–	R11	R9	–
	0.278	0.683	–	0.254	0.530	–
	R12	–	–	R12	–	–
	0.429	–	–	0.450	–	–
F8	R13	R11	–	R13	R11	–
	0.022	0.301	–	0.020	0.257	–

Downloaded from http://iranpaper.ir
http://www.itrans24.com/landing1.html
سفارش ترجمه این مقاله
آنلاین: www.trans24.ir
تماس: ۶۶۵۷۲۲۳۸-۴۰ (۰۲۱)
trans24

Table B2
Optimal primary and backup relay operating times of scenario 15 for LG faults in radial DN.

Fault location	Operating times of relays in sec. (p = primary, b = backup)					
	Islanded			Grid-connected		
	p	b1	b2	p	b1	b2
F1	R1	–	–	R1	–	–
	–	–	–	0.274	–	–
	R2	R4	–	R2	R4	–
	0.000	0.217	–	0.000	0.226	–
F2	R3	R1	–	R3	R1	–
	0.000	–	–	0.509	0.930	–
	R4	R6	R10	R4	R6	R10
	0.217	0.725	0.498	0.226	0.894	0.548
F3	R5	R10	R3	R5	R10	R3
	0.310	0.652	1.583	0.257	0.757	0.964
	R6	–	–	R6	–	–
	0.513	–	–	0.590	–	–
F4	R7	R5	–	R7	R5	–
	0.021	0.350	–	0.020	0.263	–
F5	R8	R5	–	R8	R5	–
	0.019	0.344	–	0.018	0.261	–
F6	R9	R3	R6	R9	R3	R6
	0.595	1.437	1.093	0.521	0.934	1.280
	R10	R12	–	R10	R12	–
	0.331	0.726	–	0.363	0.818	–
F7	R11	R9	–	R11	R9	–
	0.273	0.679	–	0.251	0.533	–
	R12	–	–	R12	–	–
	0.396	–	–	0.432	–	–
F8	R13	R11	–	R13	R11	–
	0.022	0.303	–	0.020	0.258	–

References

[1] Zhan H, Wang C, Wang Y, Yang X, Zhang X, Wu C, et al. Relay protection coordination integrated optimal placement and sizing of distributed generation sources in distribution networks. IEEE Trans Smart Grid 2015;PP. http://dx.doi.org/10.1109/TSG.2015.2420667. pp. 1–1.

[2] Pedraza A, Reyes D, Gomez C, Santamaria F. Optimization methodology to distributed generation location in distribution networks assessing protections coordination. IEEE Latin Am Trans 2015;13:1398–406. http://dx.doi.org/10.1109/TLA.2015.7111995.

[3] Yazdanpanahi H, Wilsun X, Yun Wei L. A novel fault current control scheme to reduce synchronous DG's impact on protection coordination. IEEE Trans Power Delivery 2014;29:542–51. http://dx.doi.org/10.1109/TPWRD.2013.2276948.

[4] Chabanloo RM, Abyaneh HA, Agheli A, Rastegar H. Overcurrent relays coordination considering transient behaviour of fault current limiter and distributed generation in distribution power network. IET Gener Transm Distrib 2011;5:903–11. http://dx.doi.org/10.1049/iet-gtd.2010.0754.

[5] Hyung-Chul J, Sung-Kwan J. Superconducting fault current limiter placement for power system protection using the minimax regret criterion. IEEE Trans Appl Supercond 2015;25:1–5. http://dx.doi.org/10.1109/TASC.2015.2411052.

[6] Sung-Hun L, Jin-Seok K, Jae-Chul K. Study on correction of protective devices for application of a SFCL in a power distribution system with a dispersed generation. IEEE Trans Appl Supercond 2013;23. http://dx.doi.org/10.1109/TASC.2013.2238283. 5603504-5603504.

[7] Najy WKA, Zeineldin HH, Woon WL. Optimal protection coordination for microgrids with grid-connected and islanded capability. IEEE Trans Industr Electron 2013;60:1668–77. http://dx.doi.org/10.1109/TIE.2012.2192893.

[8] Hyung-Chul J, Sung-Kwan J, Kisung L. Optimal placement of superconducting fault current limiters (SFCLs) for protection of an electric power system with distributed generations (DGs). IEEE Trans Appl Supercond 2013;23. http://dx.doi.org/10.1109/TASC.2012.2232958. pp. 5600304-5600304.

[9] El-Khattam W, Sidhu TS. Restoration of directional overcurrent relay coordination in distributed generation systems utilizing fault current limiter. IEEE Trans Power Delivery 2008;23:576–85. http://dx.doi.org/10.1109/TPWRD.2008.915778.

[10] Ibrahim DK, Abo El Zahab EED, Mostafa SAEA. New coordination approach to minimize the number of re-adjusted relays when adding DGs in interconnected power systems with a minimum value of fault current limiter. Int J Electr Power Energy Syst 2017;85:32–41. http://dx.doi.org/10.1016/j.ijepes.2016.08.003. 2.

[11] Javadi H, Ali Mousavi SM, Khederzadeh M. A novel approach to increase FCL application in preservation of over-current relays coordination in presence of asynchronous DGs. Int J Electr Power Energy Syst 2013;44:810–5. http://dx.doi.org/10.1016/j.ijepes.2012.08.030. 1.

[12] Coffele F, Booth C, Dysko A. An adaptive overcurrent protection scheme for distribution networks. IEEE Trans Power Delivery 2015;30:561–8. http://dx.doi.org/10.1109/TPWRD.2013.2294879.

[13] Shih-Chieh H, Chao-Shun C, Cheng-Ta T, Cheng-Ting H, Chia-Hung L. Adaptive relay setting for distribution systems considering operation scenarios of wind generators. IEEE Trans Ind Appl 2014;50:1356–63. http://dx.doi.org/10.1109/TIA.2013.2274613.

[14] Javadian SAM, Haghifam MR, Bathaee SMT, Fotuhi Firoozabad M. Adaptive centralized protection scheme for distribution systems with DG using risk analysis for protective devices placement. Int J Electr Power Energy Syst 2013;44:337–45. http://dx.doi.org/10.1016/j.ijepes.2012.07.056. 1.

[15] Zamani MA, Yazdani A, Sidhu TS. A communication-assisted protection strategy for inverter-based medium-voltage microgrids. IEEE Trans Smart Grid 2012;3:2088–99. http://dx.doi.org/10.1109/TSG.2012.2211045.

[16] Ma J, Wang X, Zhang Y, Yang Q, Phadke AG. A novel adaptive current protection scheme for distribution systems with distributed generation. Int J Electr Power Energy Syst 2012;43:1460–6. http://dx.doi.org/10.1016/j.ijepes.2012.07.024. 12.

[17] Zamani MA, Sidhu TS, Yazdani A. A protection strategy and microprocessor-based relay for low-voltage microgrids. IEEE Trans Power Delivery 2011;26:1873–83. http://dx.doi.org/10.1109/TPWRD.2011.2120628.

[18] Zeineldin HH, Sharaf HM, Ibrahim DK, Abou El-Zahab EED. Optimal protection coordination for meshed distribution systems with DG using dual setting directional over-current relays. IEEE Trans Smart Grid 2015;6:115–23. http://dx.doi.org/10.1109/TSG.2014.2357813.

[19] Zeineldin HH, Sharaf HM, Ibrahim DK, El-Zahab EEA. Closure to; Optimal protection coordination for meshed distribution systems with DG using dual setting directional over-current relays. IEEE Trans Smart Grid 2016;7. http://dx.doi.org/10.1109/TSG.2016.2548879. 1757–1757.

[20] Jing M, Wei M, Xi W, Zengping W. A new adaptive voltage protection scheme for distribution network with distributed generations. Can J Electr Comput Eng 2013;36:142–51. http://dx.doi.org/10.1109/CJECE.2014.2302858.

[21] Al-Nasseri H, Redfern MA. Harmonics content based protection scheme for Micro-grids dominated by solid state converters. In: 12th International middle-east power system conference (MEPCON); 2008. p. 50–6. http://dx.doi.org/10.1109/MEPCON.2008.4562361.

[22] Sinclair A, Finney D, Martin D, Sharma P. Distance protection in distribution systems: how it assists with integrating distributed resources. IEEE Trans Ind Appl 2014;50:2186–96. http://dx.doi.org/10.1109/TIA.2013.2288426.

Downloaded from http://iranpaper.ir
http://www.itrans24.com/landing1.html
سفارش ترجمه این مقاله
آنلاین: www.trans24.ir
تماس: ۶۶۵۷۲۲۳۸-۴۰ (۰۲۱)
trans24

[23] Kar S, Samantaray SR. Time-frequency transform-based differential scheme for microgrid protection. IET Gener Transm Distrib 2014;8:310–20. http://dx.doi.org/10.1049/iet-gtd.2013.0180.
[24] Sortomme E, Venkata SS, Mitra J. Microgrid protection using communication-assisted digital relays. IEEE Trans Power Delivery 2010;25:2789–96. http://dx.doi.org/10.1109/TPWRD.2009.2035810.
[25] Casagrande E, Woon WL, Zeineldin HH, Svetinovic D. A differential sequence component protection scheme for microgrids with inverter-based distributed generators. IEEE Trans Smart Grid 2014;5:29–37. http://dx.doi.org/10.1109/TSG.2013.2251017.
[26] Keil T, Jager J. Advanced coordination method for overcurrent protection relays using nonstandard tripping characteristics. IEEE Trans Power Delivery 2008;23:52–7. http://dx.doi.org/10.1109/TPWRD.2007.905337.
[27] Dewadasa M, Ghosh A, Ledwich G, Wishart M. Fault isolation in distributed generation connected distribution networks. IET Gener Transm Distrib 2011;5:1053–61. http://dx.doi.org/10.1049/iet-gtd.2010.0735.
[28] Saleh KA, Zeineldin HH, Al-Hinai A, El-Saadany EF. Optimal coordination of directional overcurrent relays using a new time-current-voltage characteristic. IEEE Trans Power Delivery 2015;30:537–44. http://dx.doi.org/10.1109/TPWRD.2014.2341666.
[29] Castillo Salazar CA, Conde Enríquez A, Schaeffer SE. Directional overcurrent relay coordination considering non-standardized time curves. Electr Power Syst Res 2015;1:42–9. http://dx.doi.org/10.1016/j.epsr.2014.12.018. 5.
[30] Sharaf HM, Zeineldin HH, Ibrahim DK, El-Zahab EELDA. A proposed coordination strategy for meshed distribution systems with DG considering user-defined characteristics of directional inverse time overcurrent relays. Int J Electr Power Energy Syst 2015;65:49–58. http://dx.doi.org/10.1016/j.ijepes.2014.09.028. 2.
[31] Ustun TS, Khan RH. Multiterminal hybrid protection of microgrids over wireless communications network. IEEE Trans Smart Grid 2015;6:2493–500. http://dx.doi.org/10.1109/TSG.2015.2406886.
[32] Nikolaidis VC, Papanikolaou E, Safigianni AS. A communication-assisted overcurrent protection scheme for radial distribution systems with distributed generation. IEEE Trans Smart Grid 2015. http://dx.doi.org/10.1109/TSG.2015.2411216. pp. 1–1.
[33] Jamali S, Borhani-Bahabadi H. A new recloser time-current-voltage characteristic for fuse saving in distribution networks with DG. IET generation, transmission & distribution; 2016. Available: <http://digital-library.theiet.org/content/journals/10.1049/iet-gtd.2016.0979>.